Revision History

Version	Date	By	Change Dsecription
V1.0	2024-04-23	zuozhongkai	1:Initial release version

Title: 01_ATK_AM62L_ReviSion History.SchDoc		
Project: ATK-DLAM62LB V1.0.PrjPCB		
Size: A4	Author: ALIENTEK	
Date: 2025/12/26	Version: V1.0	Sheet: 1 of 14

正点原子

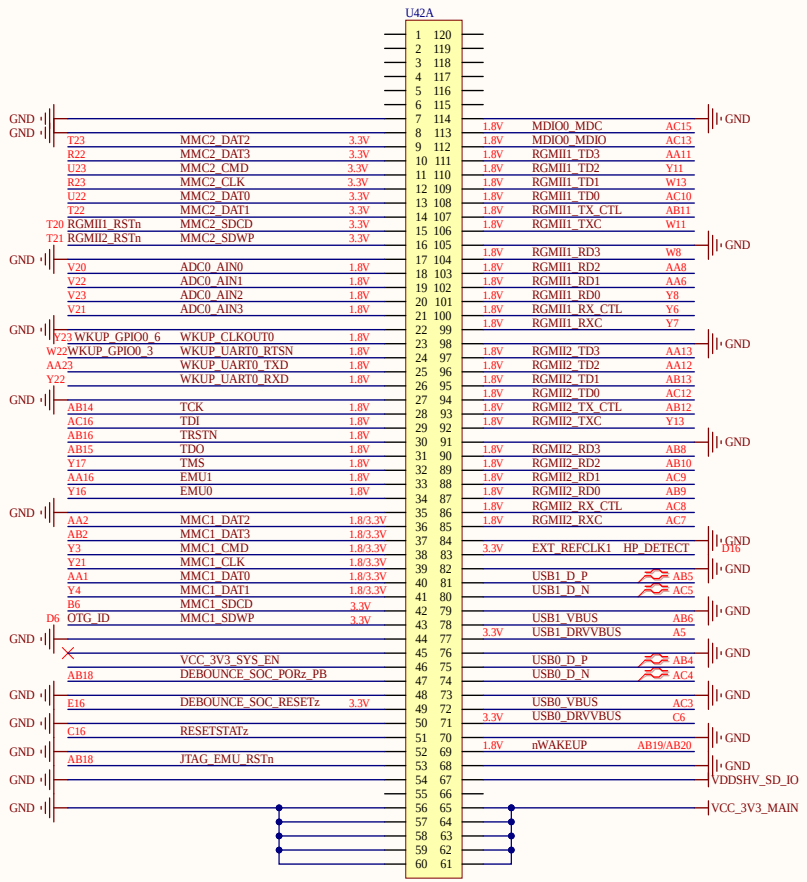

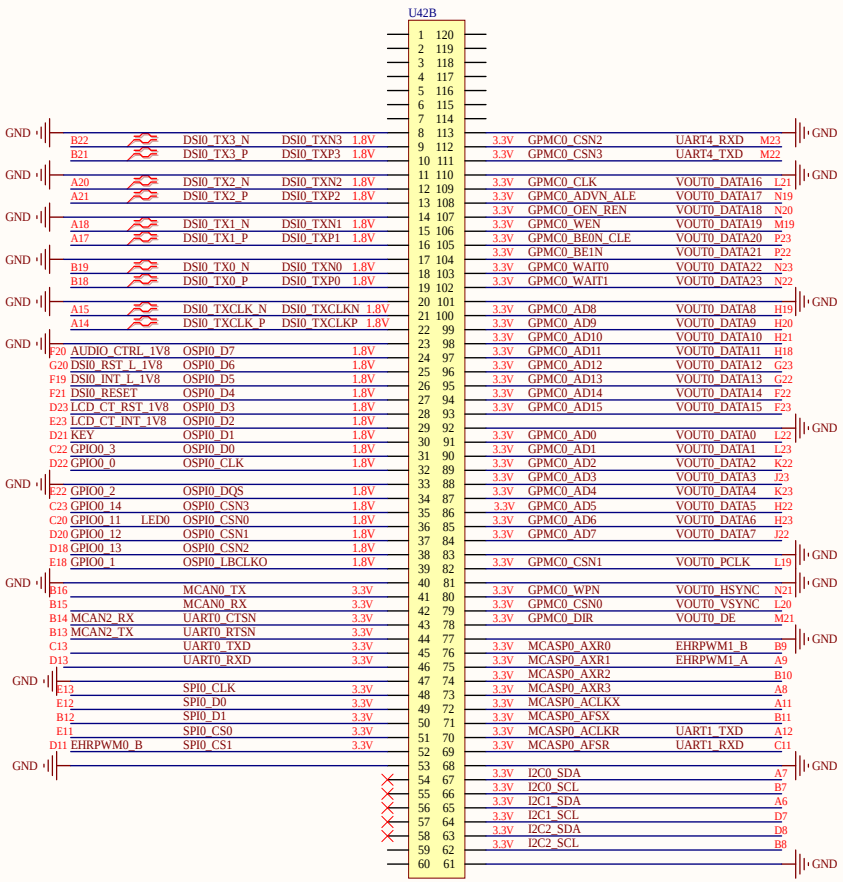

核心板固定螺母

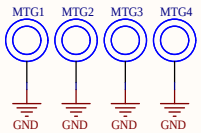

液晶模块固定螺母

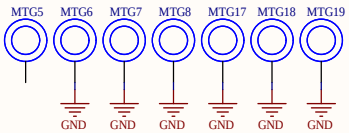

4G模块固定螺母

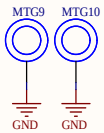

亚克力盖板固定螺母

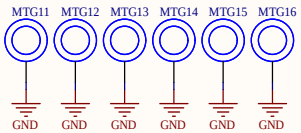

MARK 点

Title: 02_ATK_AM62L_Core_Board.SchDoc		
Project: ATK-DLAM62LB V1.0.PrjPCB		
Size: A3	Author: ALIENTEK	
Date: 2025/12/26	Version: V1.0	Sheet: 2 of 14

正点原子

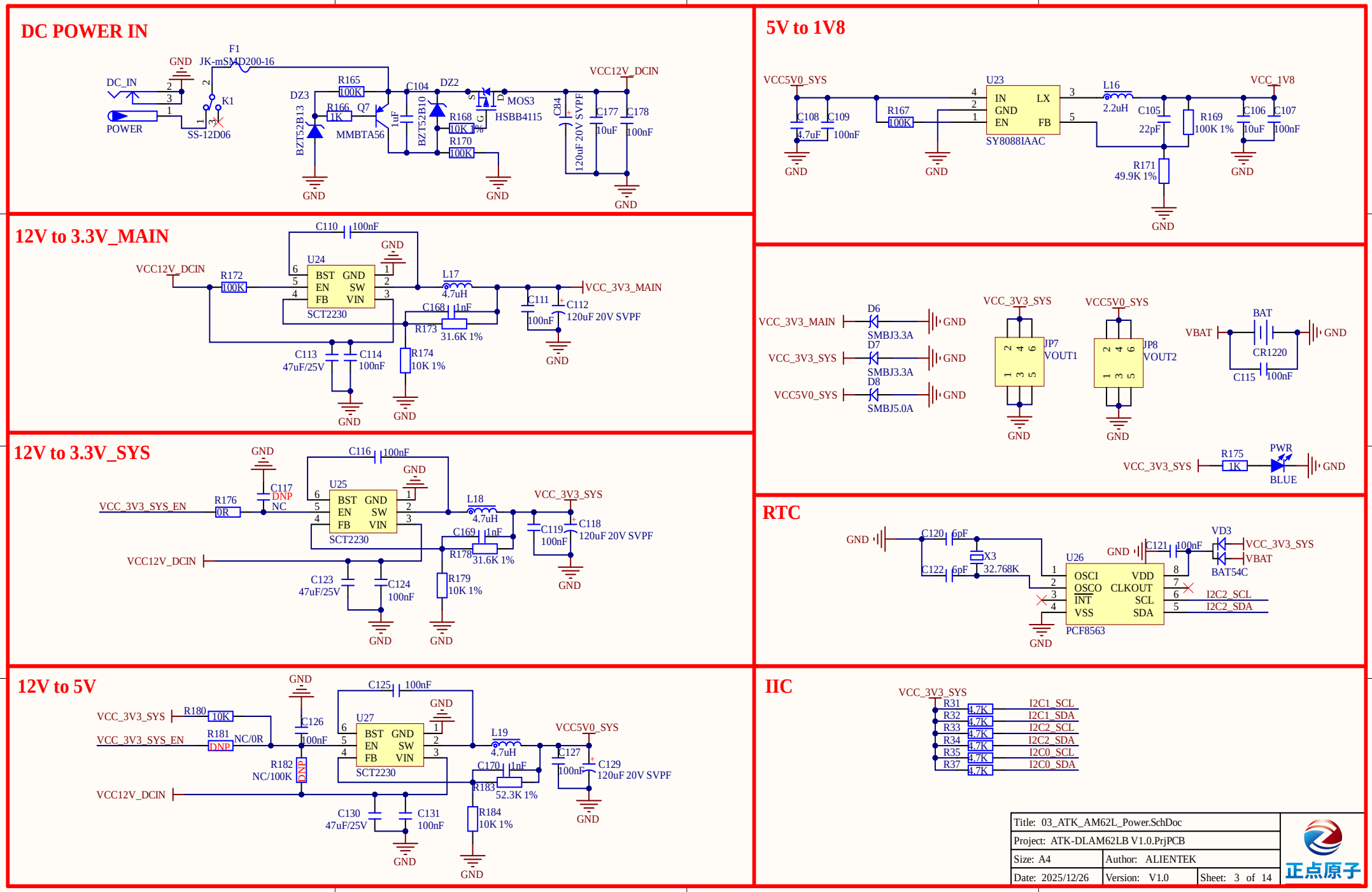
DC POWER IN
F1
JK-mSMD200-16
GND
DC_IN
POWER
K1
SS-12D06
DZ3
BZT52B13
R165
100K
R166
1K
Q7
MMBTA56
C104
1uF
DZ2
BZT52B10
R168
10K 1%
R170
100K
MOS3
HSBB4115
C84
120uF 20V SVPF
C177
10uF
C178
100nF
VCC12V_DCIN
5V to 1V8
VCC5V0_SYS
C108
4.7uF
C109
100nF
R167
100K
U23
IN
GND
EN
LX
FB
SY8088IAAC
L16
2.2uH
C105
22pF
R169
100K 1%
R171
49.9K 1%
C106
10uF
C107
100nF
VCC_1V8
12V to 3.3V_MAIN
C110
100nF
VCC12V_DCIN
R172
100K
U24
BST
GND
EN
SW
FB
VIN
SCT2230
L17
4.7uH
C168
1nF
R173
31.6K 1%
C111
100nF
C112
120uF 20V SVPF
VCC_3V3_MAIN
C113
47uF/25V
C114
100nF
R174
10K 1%
VCC_3V3_MAIN
D6
SMBJ3.3A
VCC_3V3_SYS
D7
SMBJ3.3A
VCC5V0_SYS
D8
SMBJ5.0A
JP7
VOUT1
JP8
VOUT2
VBAT
BAT
CR1220
C115
100nF
R175
1K
PWR
BLUE
12V to 3.3V_SYS
C116
100nF
C117
DNP
NC
VCC_3V3_SYS_EN
R176
0R
U25
L18
4.7uH
VCC_3V3_SYS
C119
100nF
C118
120uF 20V SVPF
C169
1nF
R178
31.6K 1%
VCC12V_DCIN
C123
47uF/25V
C124
100nF
R179
10K 1%
RTC
C120
6pF
X3
32.768K
C122
6pF
U26
OSCI
OSCO
INT
VSS
VDD
CLKOUT
SCL
SDA
PCF8563
C121
100nF
VD3
BAT54C
I2C2_SCL
I2C2_SDA
12V to 5V
VCC_3V3_SYS
R180
10K
VCC_3V3_SYS_EN
R181
DNP
NC/0R
C126
100nF
R182
NC/100K
DNP
U27
L19
4.7uH
VCC5V0_SYS
C127
100nF
C129
120uF 20V SVPF
C170
1nF
R183
52.3K 1%
VCC12V_DCIN
C130
47uF/25V
C131
100nF
R184
10K 1%
IIC
VCC_3V3_SYS
R31
R32
R33
R34
R35
R37
4.7K
I2C1_SCL
I2C1_SDA
I2C2_SCL
I2C2_SDA
I2C0_SCL
I2C0_SDA
Title: 03_ATK_AM62L_Power.SchDoc
Project: ATK-DLAM62LB V1.0.PrjPCB
Size: A4
Author: ALIENTEK
Date: 2025/12/26
Version: V1.0
Sheet: 3 of 14
正点原子

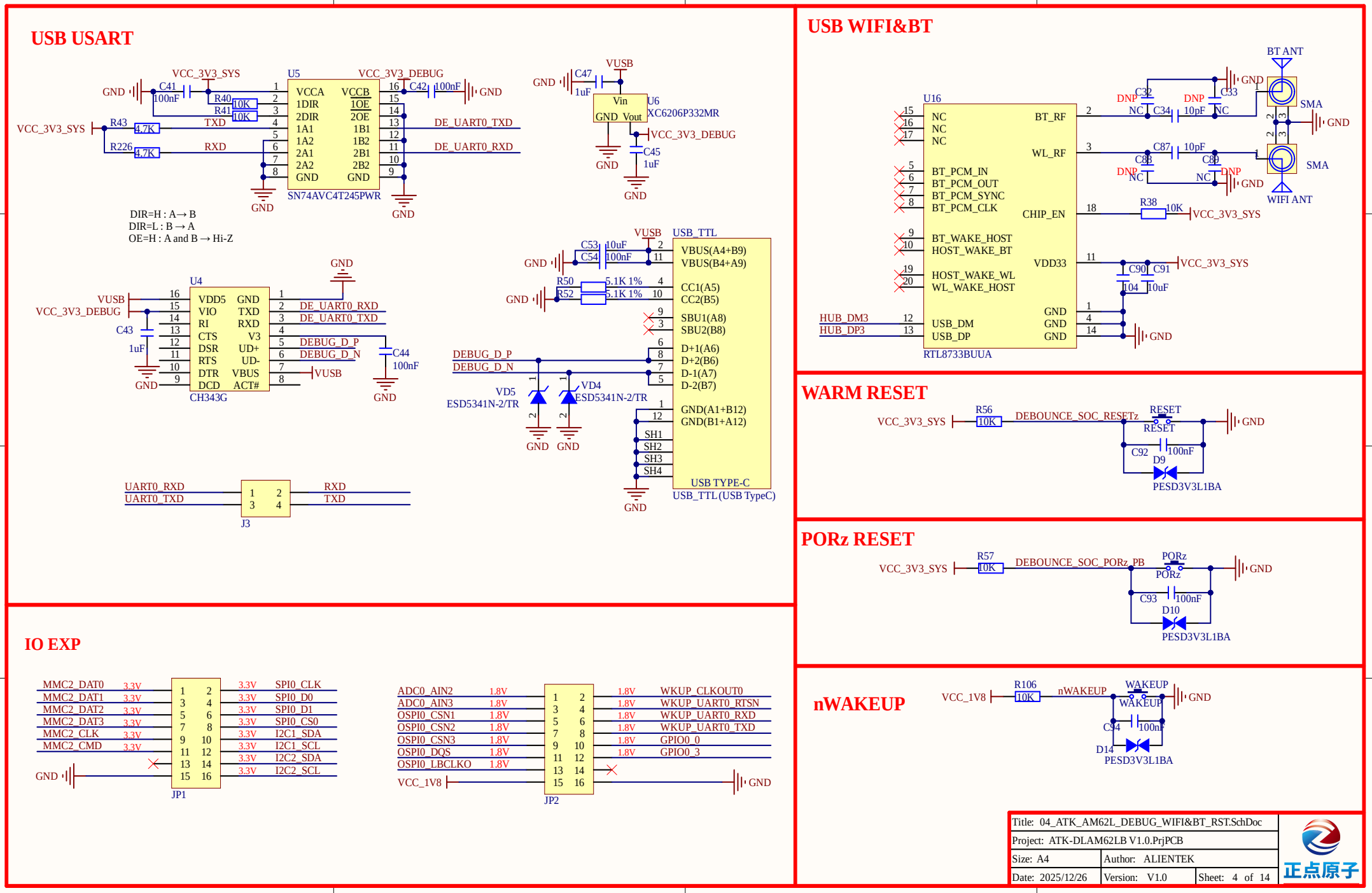
USB USART
U5
SN74AVC4T245PWR
VCCA
VCCB
1DIR
1OE
2DIR
2OE
1A1
1B1
1A2
1B2
2A1
2B1
2A2
2B2
GND
GND
VCC_3V3_SYS
VCC_3V3_DEBUG
C41 100nF
C42 100nF
R40 10K
R41 10K
R43 4.7K
R226 4.7K
TXD
RXD
DE_UART0_TXD
DE_UART0_RXD
DIR=H : A→ B
DIR=L : B → A
OE=H : A and B → Hi-Z
U6
XC6206P332MR
Vin
GND Vout
C47 1uF
C45 1uF
VUSB
U4
CH343G
VDD5
VIO
RI
CTS
DSR
RTS
DTR
DCD
GND
TXD
RXD
V3
UD+
UD-
VBUS
ACT#
DEBUG_D_P
DEBUG_D_N
C43 1uF
C44 100nF
USB_TTL
USB TYPE-C
USB_TTL (USB TypeC)
VBUS(A4+B9)
VBUS(B4+A9)
CC1(A5)
CC2(B5)
SBU1(A8)
SBU2(B8)
D+1(A6)
D+2(B6)
D-1(A7)
D-2(B7)
GND(A1+B12)
GND(B1+A12)
SH1
SH2
SH3
SH4
C53 10uF
C54 100nF
R50 5.1K 1%
R52 5.1K 1%
VD5 ESD5341N-2/TR
VD4 ESD5341N-2/TR
UART0_RXD
UART0_TXD
RXD
TXD
J3
USB WIFI&BT
U16
RTL8733BUUA
NC
BT_RF
WL_RF
BT_PCM_IN
BT_PCM_OUT
BT_PCM_SYNC
BT_PCM_CLK
CHIP_EN
BT_WAKE_HOST
HOST_WAKE_BT
VDD33
HOST_WAKE_WL
WL_WAKE_HOST
USB_DM
USB_DP
HUB_DM3
HUB_DP3
BT ANT
WIFI ANT
SMA
C32 DNP NC
C34 10pF
C33 DNP NC
C87 10pF
C88 DNP NC
C89 DNP NC
R38 10K
C90 104
C91 10uF
WARM RESET
R56 10K
DEBOUNCE_SOC_RESETz
RESET
C92 100nF
D9 PESD3V3L1BA
PORz RESET
R57 10K
DEBOUNCE_SOC_PORz_PB
PORz
C93 100nF
D10 PESD3V3L1BA
nWAKEUP
R106 10K
nWAKEUP
WAKEUP
C94 100nF
D14 PESD3V3L1BA
VCC_1V8
IO EXP
JP1
MMC2_DAT0 3.3V
MMC2_DAT1 3.3V
MMC2_DAT2 3.3V
MMC2_DAT3 3.3V
MMC2_CLK 3.3V
MMC2_CMD 3.3V
SPI0_CLK
SPI0_D0
SPI0_D1
SPI0_CS0
I2C1_SDA
I2C1_SCL
I2C2_SDA
I2C2_SCL
JP2
ADC0_AIN2 1.8V
ADC0_AIN3 1.8V
OSPI0_CSN1 1.8V
OSPI0_CSN2 1.8V
OSPI0_CSN3 1.8V
OSPI0_DQS 1.8V
OSPI0_LBCLKO 1.8V
WKUP_CLKOUT0
WKUP_UART0_RTSN
WKUP_UART0_RXD
WKUP_UART0_TXD
GPIO0_0
GPIO0_3
Title: 04_ATK_AM62L_DEBUG_WIFI&BT_RST.SchDoc
Project: ATK-DLAM62LB V1.0.PrjPCB
Size: A4
Author: ALIENTEK
Date: 2025/12/26
Version: V1.0
Sheet: 4 of 14
正点原子

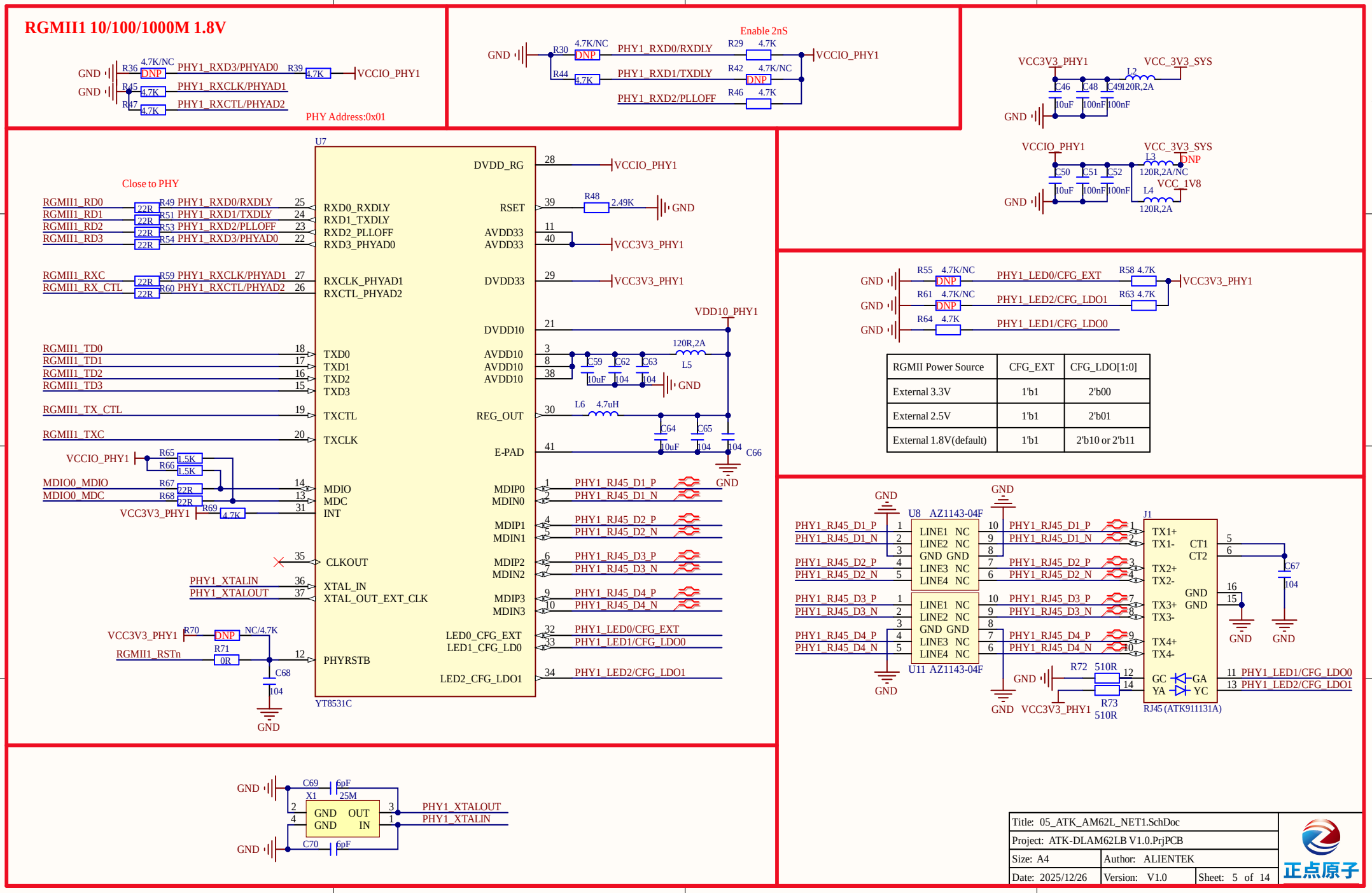

RGMII Power Source	CFG_EXT	CFG_LDO[1:0]
External 3.3V	1'b1	2'b00
External 2.5V	1'b1	2'b01
External 1.8V(default)	1'b1	2'b10 or 2'b11

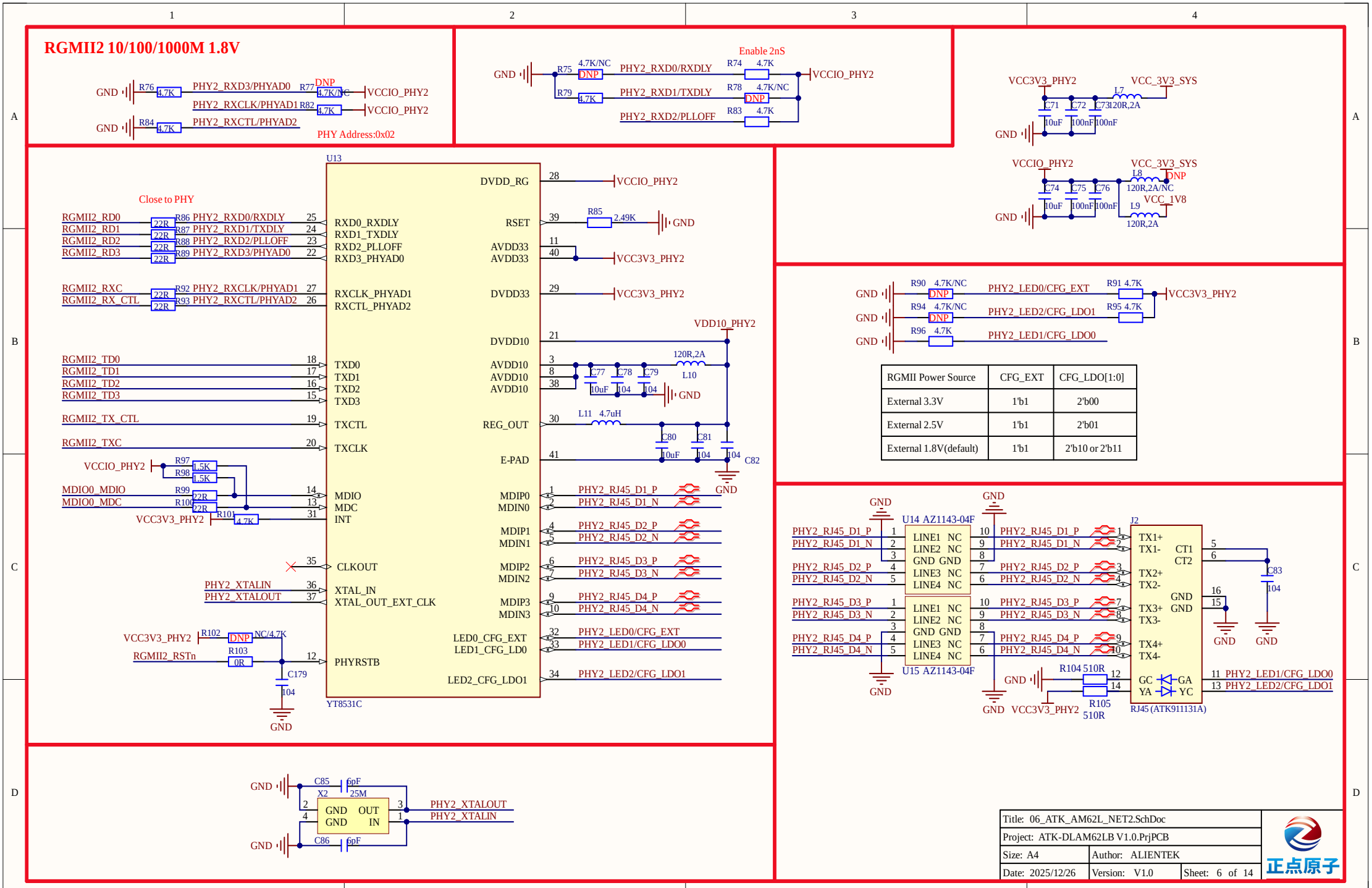
RGMII2 10/100/1000M 1.8V
GND
R76 4.7K PHY2_RXD3/PHYAD0
R77 DNP 4.7K/NC VCCIO_PHY2
PHY2_RXCLK/PHYAD1 R82 4.7K VCCIO_PHY2
R84 4.7K PHY2_RXCTL/PHYAD2
PHY Address:0x02
Enable 2nS
R75 4.7K/NC DNP PHY2_RXD0/RXDLY R74 4.7K VCCIO_PHY2
R79 4.7K PHY2_RXD1/TXDLY R78 4.7K/NC DNP
PHY2_RXD2/PLLOFF R83 4.7K
VCC3V3_PHY2
VCC_3V3_SYS
L7 120R,2A
C71 10uF C72 100nF C73 100nF
VCCIO_PHY2
VCC_3V3_SYS
L8 DNP 120R,2A/NC
C74 10uF C75 100nF C76 100nF
VCC_1V8
L9 120R,2A
U13
Close to PHY
RGMII2_RD0 R86 22R PHY2_RXD0/RXDLY 25
RGMII2_RD1 R87 22R PHY2_RXD1/TXDLY 24
RGMII2_RD2 R88 22R PHY2_RXD2/PLLOFF 23
RGMII2_RD3 R89 22R PHY2_RXD3/PHYAD0 22
RGMII2_RXC R92 22R PHY2_RXCLK/PHYAD1 27
RGMII2_RX_CTL R93 22R PHY2_RXCTL/PHYAD2 26
RGMII2_TD0 18
RGMII2_TD1 17
RGMII2_TD2 16
RGMII2_TD3 15
RGMII2_TX_CTL 19
RGMII2_TXC 20
VCCIO_PHY2 R97 1.5K R98 1.5K
MDIO0_MDIO R99 22R 14
MDIO0_MDC R100 22R 13
VCC3V3_PHY2 R101 4.7K 31
35
PHY2_XTALIN 36
PHY2_XTALOUT 37
VCC3V3_PHY2 R102 DNP NC/4.7K
RGMII2_RSTn R103 0R 12
C179 104
GND
RXD0_RXDLY
RXD1_TXDLY
RXD2_PLLOFF
RXD3_PHYAD0
RXCLK_PHYAD1
RXCTL_PHYAD2
TXD0
TXD1
TXD2
TXD3
TXCTL
TXCLK
MDIO
MDC
INT
CLKOUT
XTAL_IN
XTAL_OUT_EXT_CLK
PHYRSTB
YT8531C
DVDD_RG 28 VCCIO_PHY2
RSET 39 R85 2.49K GND
AVDD33 11
AVDD33 40 VCC3V3_PHY2
DVDD33 29 VCC3V3_PHY2
VDD10_PHY2
DVDD10 21
AVDD10 3
AVDD10 8
AVDD10 38
120R,2A L10
C77 10uF C78 104 C79 104 GND
REG_OUT 30 L11 4.7uH
C80 10uF C81 104 C82 104
E-PAD 41 GND
MDIP0 1 PHY2_RJ45_D1_P
MDIN0 2 PHY2_RJ45_D1_N
MDIP1 4 PHY2_RJ45_D2_P
MDIN1 5 PHY2_RJ45_D2_N
MDIP2 6 PHY2_RJ45_D3_P
MDIN2 7 PHY2_RJ45_D3_N
MDIP3 9 PHY2_RJ45_D4_P
MDIN3 10 PHY2_RJ45_D4_N
LED0_CFG_EXT 32 PHY2_LED0/CFG_EXT
LED1_CFG_LD0 33 PHY2_LED1/CFG_LDO0
LED2_CFG_LDO1 34 PHY2_LED2/CFG_LDO1
GND R90 4.7K/NC DNP PHY2_LED0/CFG_EXT R91 4.7K VCC3V3_PHY2
GND R94 4.7K/NC DNP PHY2_LED2/CFG_LDO1 R95 4.7K
GND R96 4.7K PHY2_LED1/CFG_LDO0
RGMII Power Source | CFG_EXT | CFG_LDO[1:0]
External 3.3V | 1'b1 | 2'b00
External 2.5V | 1'b1 | 2'b01
External 1.8V(default) | 1'b1 | 2'b10 or 2'b11
U14 AZ1143-04F
U15 AZ1143-04F
LINE1 NC
LINE2 NC
GND GND
LINE3 NC
LINE4 NC
PHY2_RJ45_D1_P
PHY2_RJ45_D1_N
PHY2_RJ45_D2_P
PHY2_RJ45_D2_N
PHY2_RJ45_D3_P
PHY2_RJ45_D3_N
PHY2_RJ45_D4_P
PHY2_RJ45_D4_N
J2
TX1+
TX1-
TX2+
TX2-
TX3+
TX3-
TX4+
TX4-
CT1
CT2
GND
GND
C83 104
GND GND
R104 510R
R105 510R
GC
YA
GA
YC
PHY2_LED1/CFG_LDO0
PHY2_LED2/CFG_LDO1
RJ45 (ATK911131A)
C85 6pF
X2 25M
GND OUT
GND IN
C86 6pF
PHY2_XTALOUT
PHY2_XTALIN
Title: 06_ATK_AM62L_NET2.SchDoc
Project: ATK-DLAM62LB V1.0.PrjPCB
Size: A4
Author: ALIENTEK
Date: 2025/12/26
Version: V1.0
Sheet: 6 of 14
正点原子

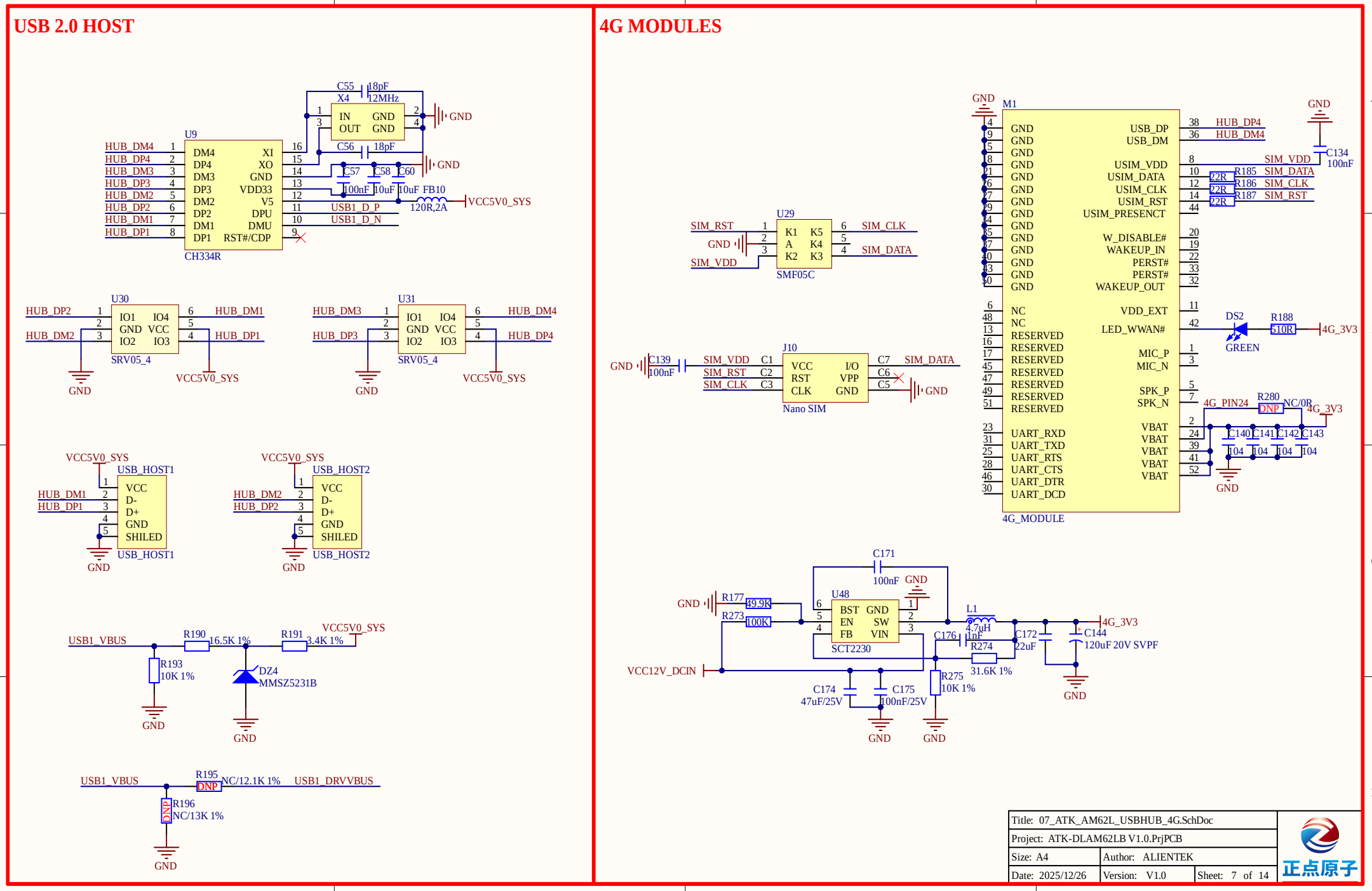
USB 2.0 HOST
4G MODULES
U9
CH334R
C55 18pF
X4 12MHz
C56 18pF
C57 100nF
C58 10uF
C60 10uF
FB10 120R,2A
VCC5V0_SYS
USB1_D_P
USB1_D_N
HUB_DM4
HUB_DP4
HUB_DM3
HUB_DP3
HUB_DM2
HUB_DP2
HUB_DM1
HUB_DP1
U30
SRV05_4
U31
SRV05_4
USB_HOST1
USB_HOST2
USB1_VBUS
R190 16.5K 1%
R191 3.4K 1%
R193 10K 1%
DZ4 MMSZ5231B
R195 DNP NC/12.1K 1%
USB1_DRVVBUS
R196 DNP NC/13K 1%
U29
SMF05C
SIM_RST
SIM_VDD
SIM_CLK
SIM_DATA
J10
Nano SIM
C139 100nF
M1
4G_MODULE
R185 22R
R186 22R
R187 22R
C134 100nF
DS2 GREEN
R188 510R
4G_3V3
R280 DNP NC/0R
4G_PIN24
C140 104
C141 104
C142 104
C143 104
C171 100nF
U48
SCT2230
R177 49.9K
R273 100K
L1 4.7uH
C176 1nF
R274 31.6K 1%
C172 22uF
C144 120uF 20V SVPF
VCC12V_DCIN
C174 47uF/25V
C175 100nF/25V
R275 10K 1%
Title: 07_ATK_AM62L_USBHUB_4G.SchDoc
Project: ATK-DLAM62LB V1.0.PrjPCB
Size: A4
Author: ALIENTEK
Date: 2025/12/26
Version: V1.0
Sheet: 7 of 14
正点原子

FULL PINCOUNT SWITCH

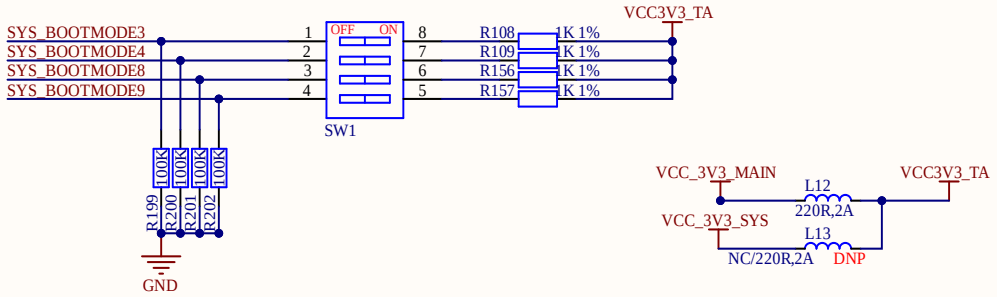

SW1

M3(1)	M4(2)	M8(3)	M9(4)	BOOT DEVICE
OFF	ON	OFF	ON	USB (DFU)
OFF	ON	ON	ON	USB(HOST)
OFF	OFF	OFF	ON	MicroSD
OFF	OFF	OFF	OFF	EMMC (UDA)
ON	OFF	OFF	OFF	EMMC(BOOT)

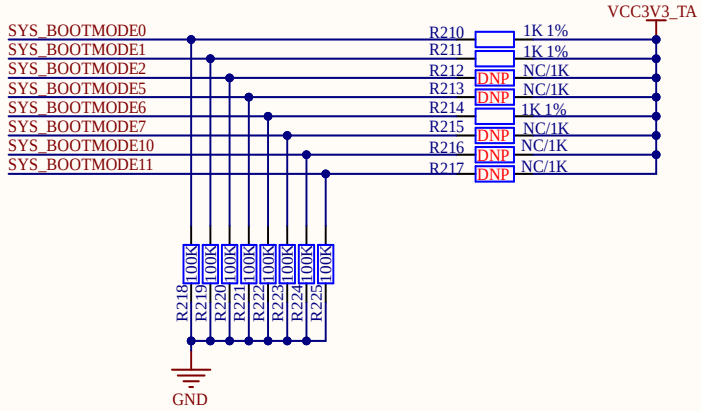

D-NOTE:
The device supports two different BOOTMODE pin mapping options:
1. Reduced Pincount - Using only 4 of the bootstrap pins BOOTMODE[15:12]
2. Full Pincount - Using all 16 of the bootstrap pins BOOTMODE[15:0]

REDUCED PINCOUNT SWITCH

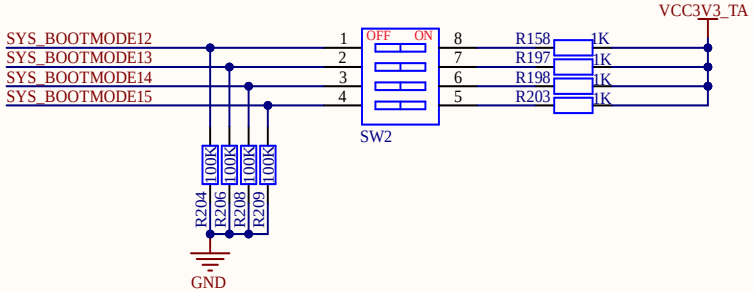

SW2

M12(1)	M13(2)	M14(3)	M15(4)	BOOT DEVICE
OFF	OFF	OFF	ON	EMMC(BOOT)
OFF	ON	OFF	ON	MicroSD
OFF	ON	ON	ON	UART
ON	ON	ON	ON	USB0 DFU

USER KEY

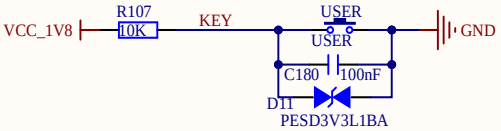

Title: 08_ATK_AM62L_BOOT.SchDoc		
Project: ATK-DLAM62LB V1.0.PrjPCB		
Size: A4	Author: ALIENTEK	
Date: 2025/12/26	Version: V1.0	Sheet: 8 of 14

正点原子

FULL PINCOUNT BUFFER

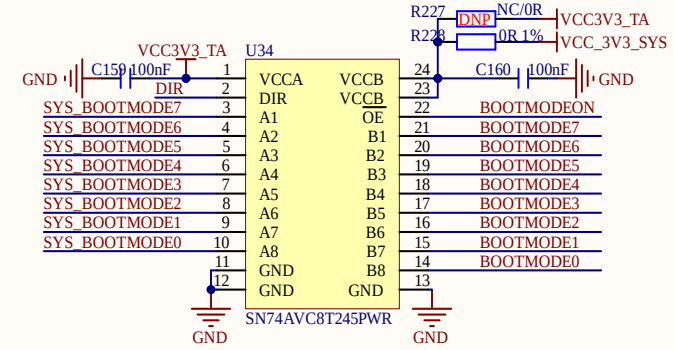

D-Note: VCC3V3_TA supply is used for test automation.
Connect SoC_DVDD3V3 in the custom board design when buffers are not used

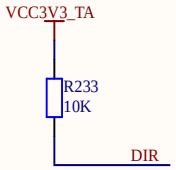

REDUCED PINCOUNT BUFFER

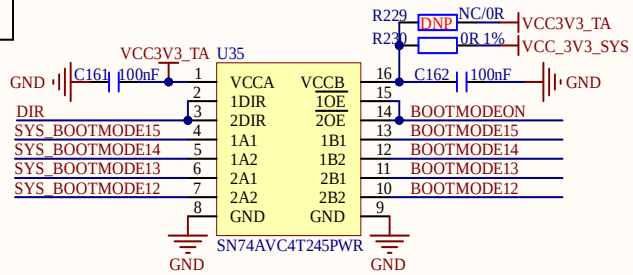

DIR = H: A -> B
DIR = L: B -> A
OE = H: output = Hi-Z

Bootmode buffers are optional.
A pullup or pulldown resistor can be used
to set the BOOTMODE input state prior to
PORz release.

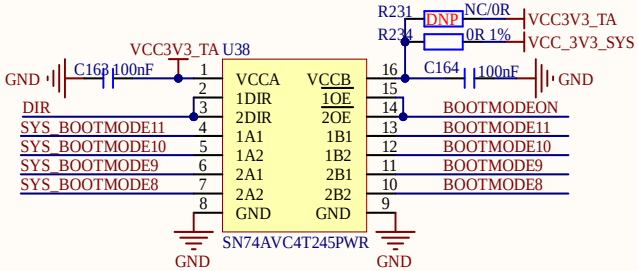

DIR = H: A -> B
DIR = L: B -> A
OE = H: output = Hi-Z

Bootmode buffers are optional.
A pullup or pulldown resistor can be used
to set the BOOTMODE input state prior to
PORz release.

D-NOTE:
1. 1K Resistor at the output of the buffer is recommended when the bootmode pins are used for alternate functions
2. Replace 1K Resistor at the output of the buffer with resistor of value 0E when bootmode buffers are not used

BOOTMODE PINS

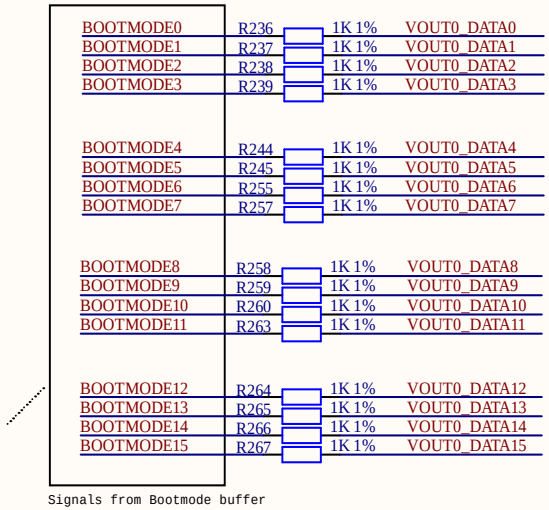

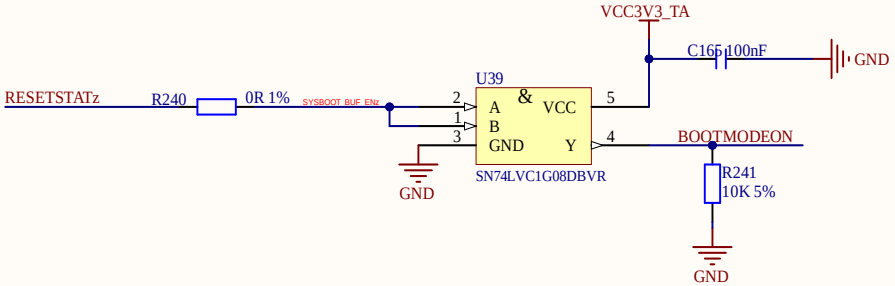

D-Note :
Connect SYS_BOOTMODE signals when bootmode buffers are not used

Title: 09_ATK_AM62L_BOOT_BUFFER.SchDoc		
Project: ATK-DLAM62LB V1.0.PrjPCB		
Size: A4	Author: ALIENTEK	
Date: 2025/12/26	Version: V1.0	Sheet: 9 of 14

正点原子

RGB LCD

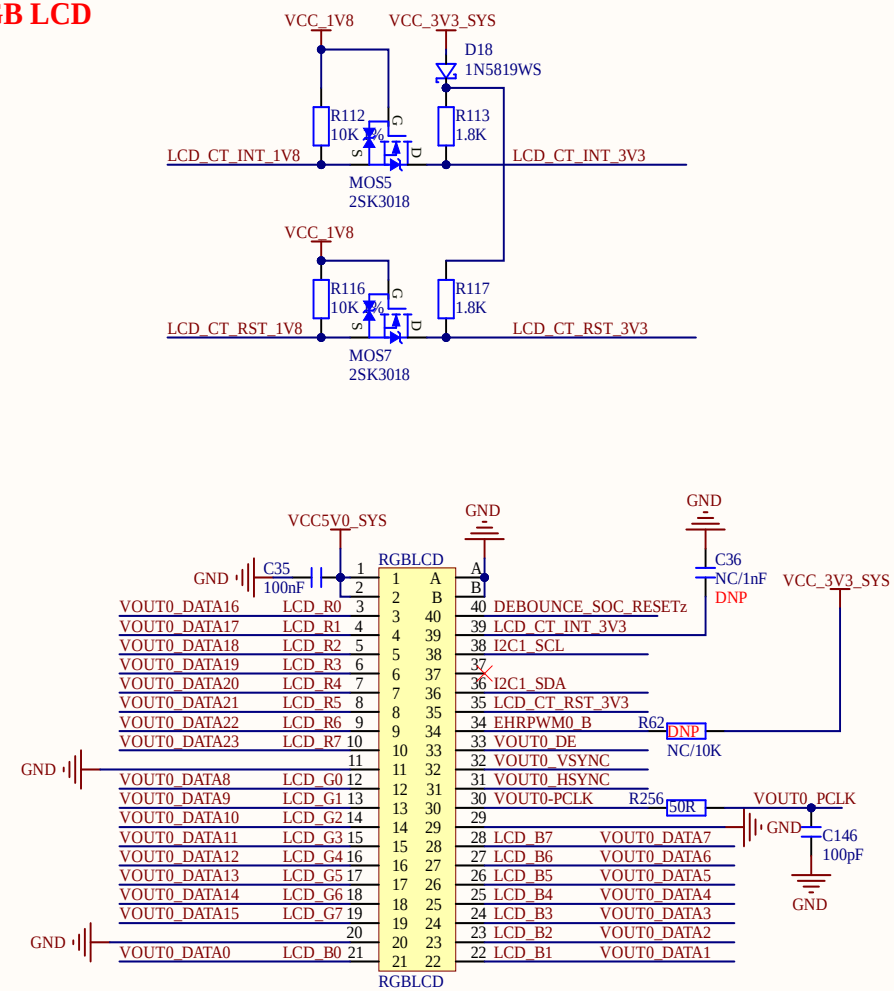

MIPI DSI

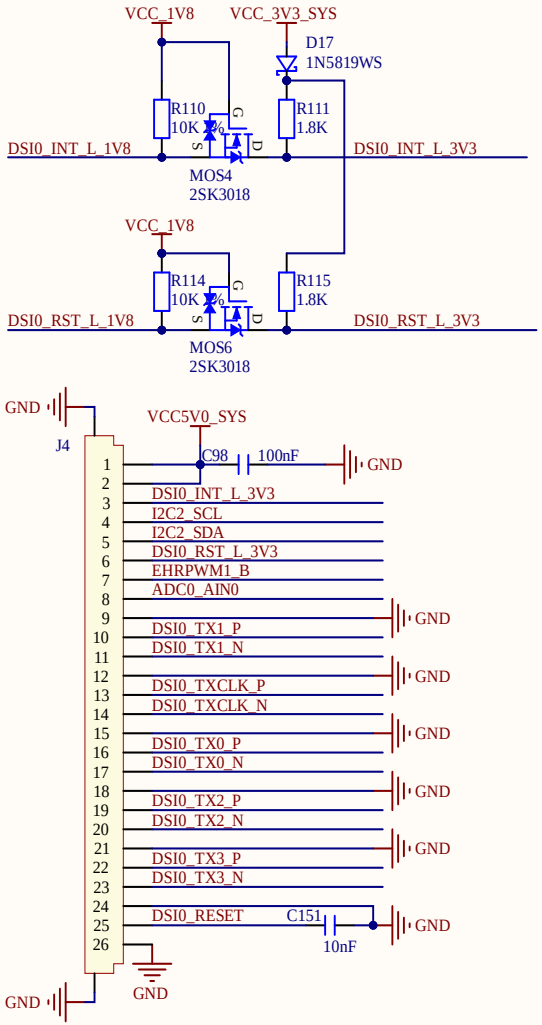

Title: 10_ATK_AM62L_DISPLAY.SchDoc		
Project: ATK-DLAM62LB V1.0.PrjPCB		
Size: A4	Author: ALIENTEK	
Date: 2025/12/26	Version: V1.0	Sheet: 10 of 14

正点原子

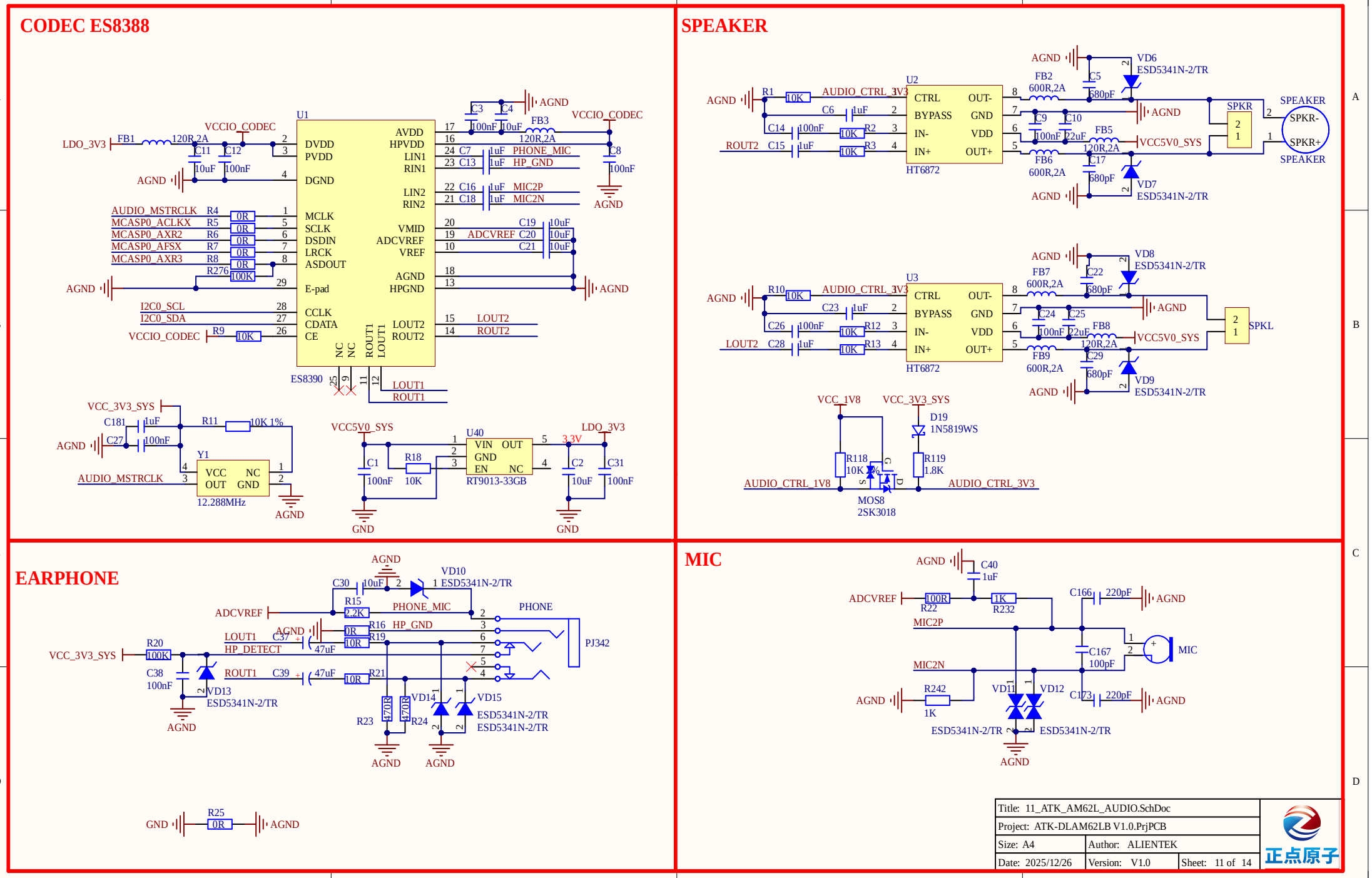
CODEC ES8388
U1
ES8390
DVDD
PVDD
DGND
MCLK
SCLK
DSDIN
LRCK
ASDOUT
E-pad
CCLK
CDATA
CE
AVDD
HPVDD
LIN1
RIN1
LIN2
RIN2
VMID
ADCVREF
VREF
AGND
HPGND
LOUT2
ROUT2
LOUT1
ROUT1
NC
LDO_3V3
FB1
120R,2A
VCCIO_CODEC
AGND
FB3
PHONE_MIC
HP_GND
MIC2P
MIC2N
ADCVREF
AUDIO_MSTRCLK
MCASP0_ACLKX
MCASP0_AXR2
MCASP0_AFSX
MCASP0_AXR3
I2C0_SCL
I2C0_SDA
VCC_3V3_SYS
Y1
12.288MHz
VCC5V0_SYS
U40
VIN
OUT
GND
EN
NC
RT9013-33GB
3.3V
LDO_3V3
GND
SPEAKER
U2
HT6872
CTRL
BYPASS
IN-
IN+
OUT-
GND
VDD
OUT+
AUDIO_CTRL_3V3
ROUT2
VD6
VD7
ESD5341N-2/TR
FB2
FB5
FB6
600R,2A
VCC5V0_SYS
SPKR
SPEAKER
SPKR-
SPKR+
U3
LOUT2
VD8
VD9
FB7
FB8
FB9
SPKL
VCC_1V8
VCC_3V3_SYS
D19
1N5819WS
R118
R119
AUDIO_CTRL_1V8
MOS8
2SK3018
EARPHONE
VD10
ESD5341N-2/TR
PHONE_MIC
PHONE
PJ342
HP_GND
HP_DETECT
LOUT1
ROUT1
VD13
VD14
VD15
R23
R24
R25
GND
MIC
C40
1uF
R22
R232
C166
220pF
MIC
C167
100pF
R242
VD11
VD12
C173
Title: 11_ATK_AM62L_AUDIO.SchDoc
Project: ATK-DLAM62LB V1.0.PrjPCB
Size: A4
Author: ALIENTEK
Date: 2025/12/26
Version: V1.0
Sheet: 11 of 14
正点原子

RS485_1

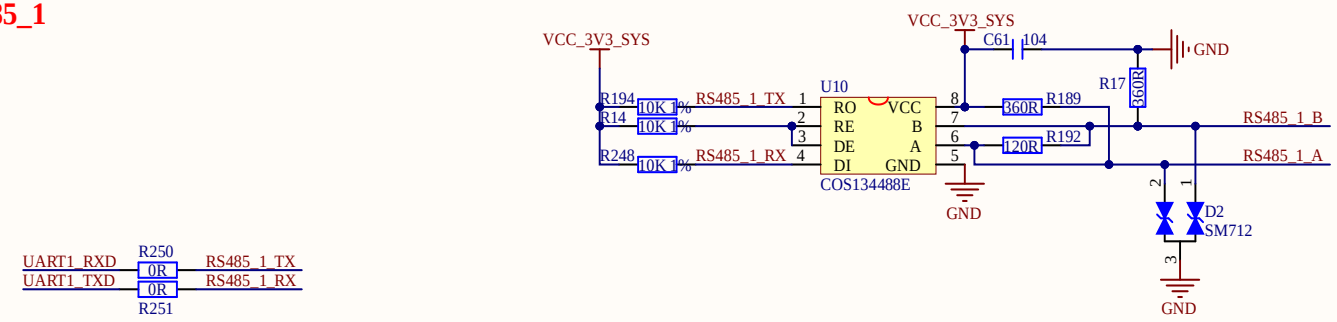

RS485_2

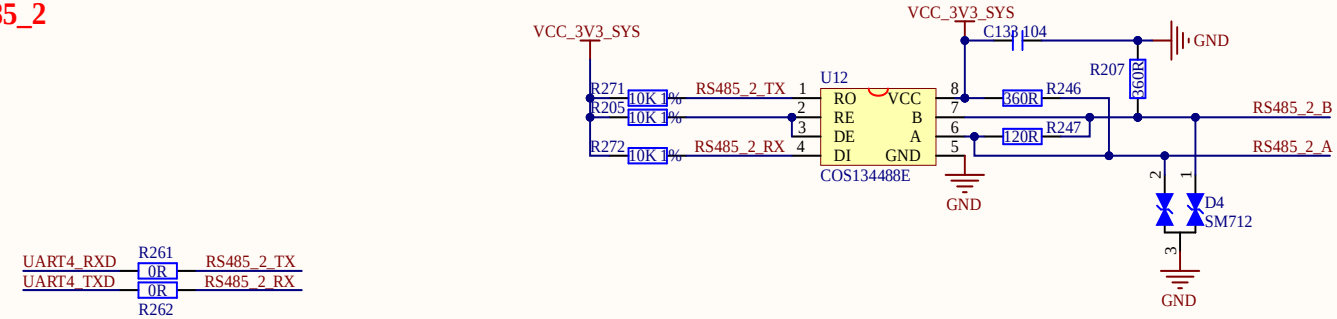

CAN0

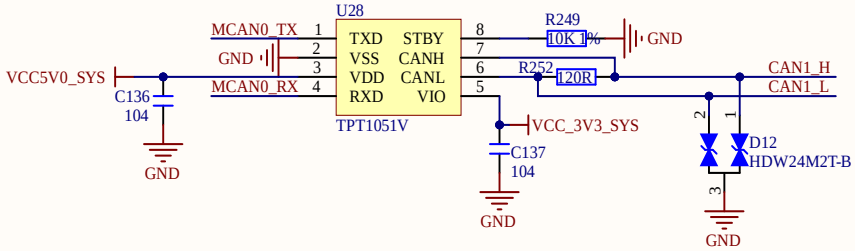

FDCAN&RS485 HEADER

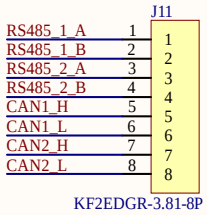

CAN2

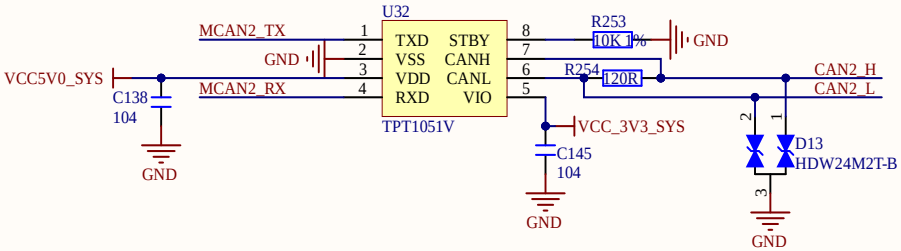

Title: 12_ATK_AM62L_CAN_RS485.SchDoc		
Project: ATK-DLAM62LB V1.0.PrjPCB		
Size: A4	Author: ALIENTEK	
Date: 2025/12/26	Version: V1.0	Sheet: 12 of 14

正点原子

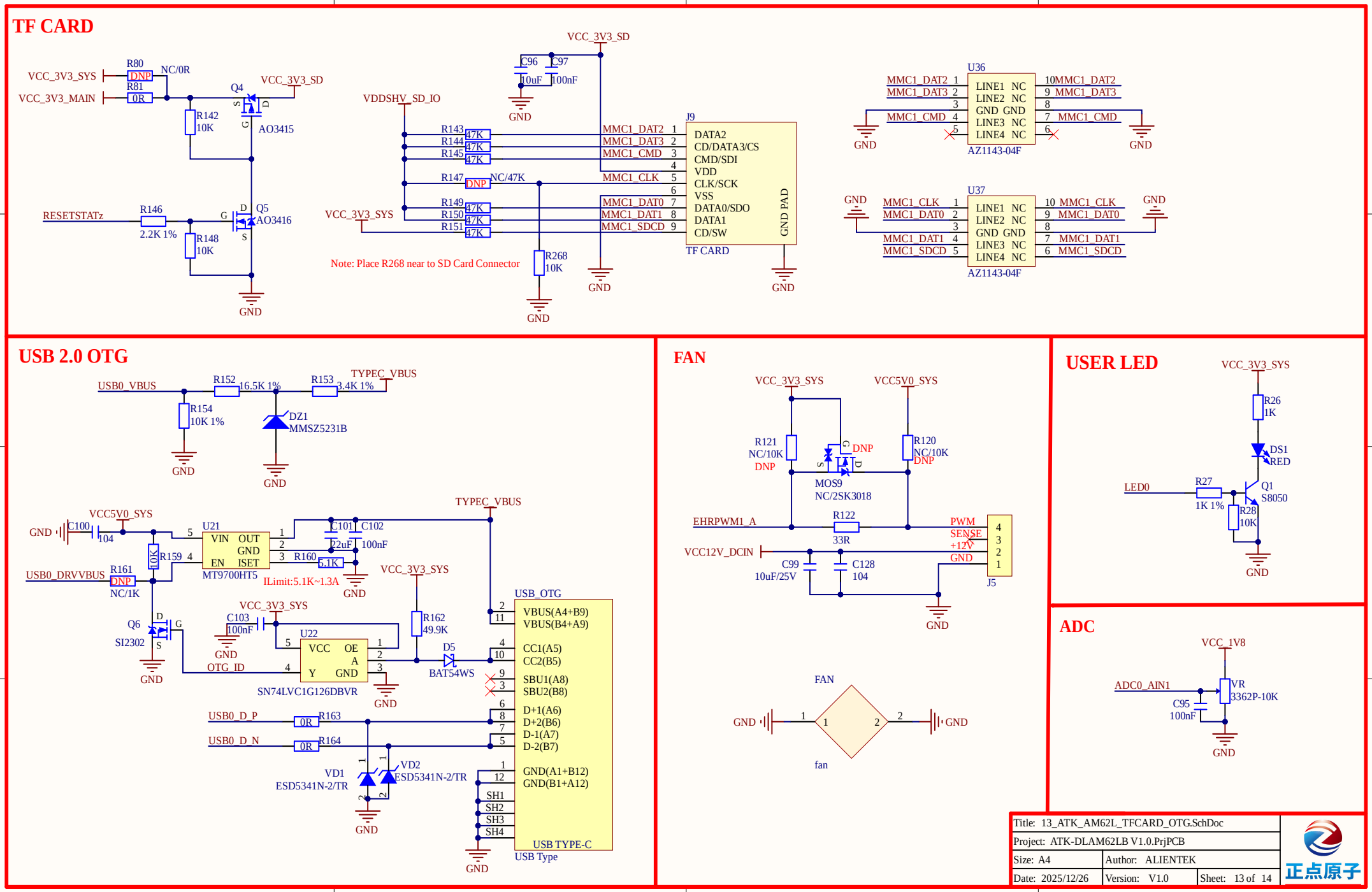
TF CARD
VCC_3V3_SYS
VCC_3V3_MAIN
R80 DNP
NC/0R
R81 0R
Q4
VCC_3V3_SD
R142 10K
AO3415
RESETSTATz
R146 2.2K 1%
R148 10K
Q5 AO3416
GND
VDDSHV_SD_IO
C96 10uF
C97 100nF
R143 47K
R144 47K
R145 47K
R147 DNP NC/47K
R149 47K
R150 47K
R151 47K
MMC1_DAT2
MMC1_DAT3
MMC1_CMD
MMC1_CLK
MMC1_DAT0
MMC1_DAT1
MMC1_SDCD
J9
DATA2
CD/DATA3/CS
CMD/SDI
VDD
CLK/SCK
VSS
DATA0/SDO
DATA1
CD/SW
GND PAD
TF CARD
R268 10K
Note: Place R268 near to SD Card Connector
U36
LINE1 NC
LINE2 NC
GND GND
LINE3 NC
LINE4 NC
AZ1143-04F
U37
USB 2.0 OTG
USB0_VBUS
R152 16.5K 1%
R153 3.4K 1%
TYPEC_VBUS
R154 10K 1%
DZ1 MMSZ5231B
VCC5V0_SYS
C100 104
U21
VIN OUT
GND
EN ISET
MT9700HT5
C101 22uF
C102 100nF
R160 5.1K
ILimit:5.1K~1.3A
USB0_DRVVBUS
R161 DNP NC/1K
R159 10K
Q6 SI2302
C103 100nF
U22
VCC OE
A
Y GND
SN74LVC1G126DBVR
OTG_ID
R162 49.9K
D5 BAT54WS
USB_OTG
VBUS(A4+B9)
VBUS(B4+A9)
CC1(A5)
CC2(B5)
SBU1(A8)
SBU2(B8)
D+1(A6)
D+2(B6)
D-1(A7)
D-2(B7)
GND(A1+B12)
GND(B1+A12)
SH1
SH2
SH3
SH4
USB TYPE-C
USB Type
USB0_D_P
USB0_D_N
R163 0R
R164 0R
VD1 ESD5341N-2/TR
VD2 ESD5341N-2/TR
FAN
R121 NC/10K DNP
R120 NC/10K DNP
MOS9 NC/2SK3018
EHRPWM1_A
R122 33R
VCC12V_DCIN
C99 10uF/25V
C128 104
PWM
SENSE
+12V
J5
fan
USER LED
R26 1K
DS1 RED
LED0
R27 1K 1%
Q1 S8050
R28 10K
ADC
VCC_1V8
ADC0_AIN1
C95 100nF
VR 3362P-10K
Title: 13_ATK_AM62L_TFCARD_OTG.SchDoc
Project: ATK-DLAM62LB V1.0.PrjPCB
Size: A4
Author: ALIENTEK
Date: 2025/12/26
Version: V1.0
Sheet: 13 of 14
正点原子

JTAG

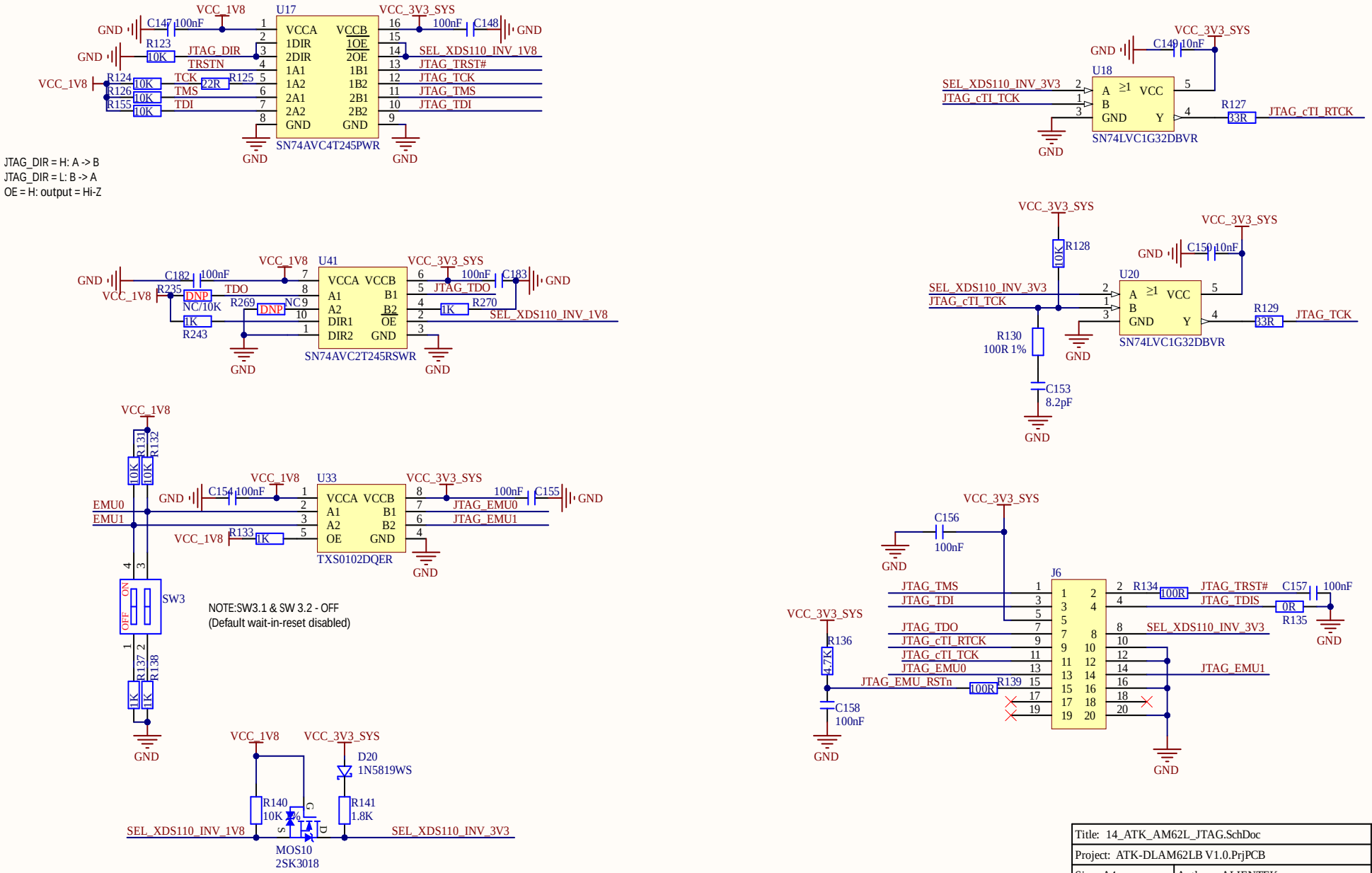

Title: 14_ATK_AM62L_JTAG.SchDoc		
Project: ATK-DLAM62LB V1.0.PrjPCB		
Size: A4	Author: ALIENTEK	
Date: 2025/12/26	Version: V1.0	Sheet: 14 of 14

正点原子